METHODS AND CONSIDERATIONS FOR HEAT FLOW PROBE DEPLOYMENT

NLSI

21-25 July '09, ARC

Kris Zacny, zacny@honeybeerobotics.com

Co-Authors:

E. Mumm, N. Kumar and A. Ashley

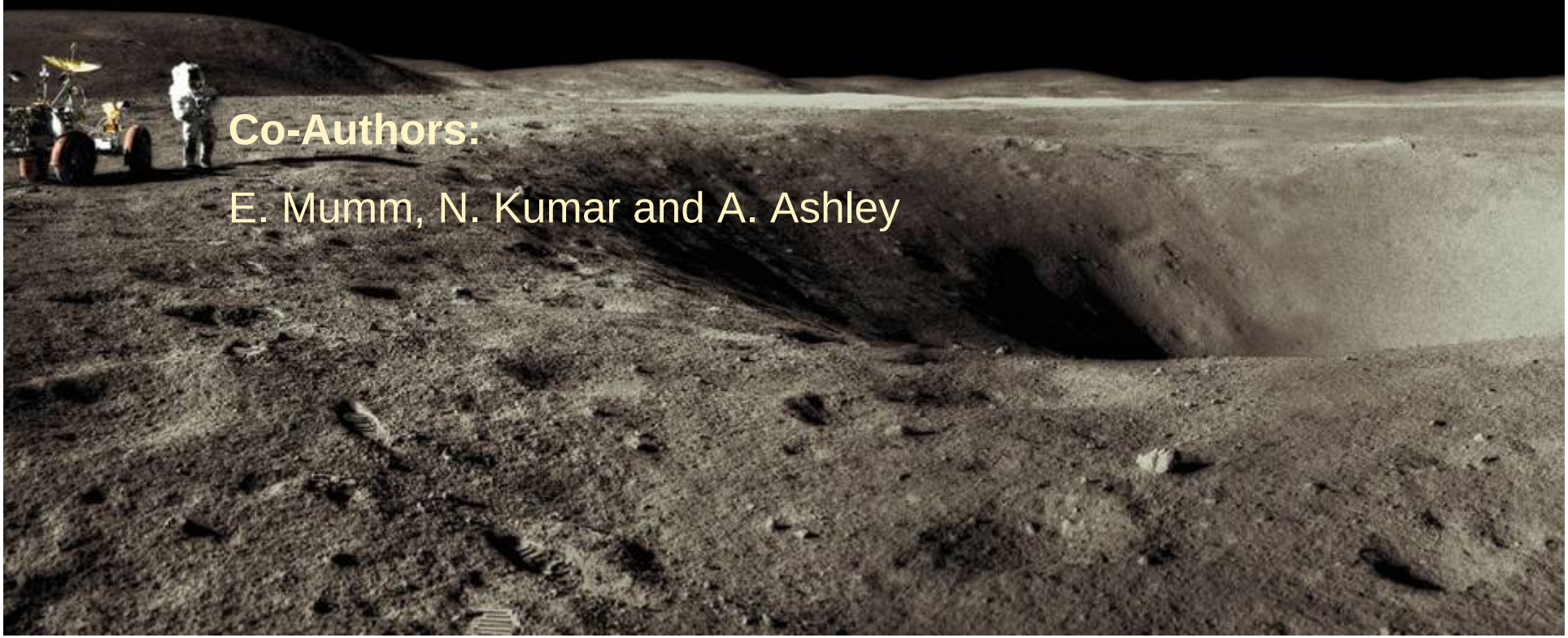

Background

- The heat flow tells us about the origin of the Moon and its composition.
- Is the 2nd most important measurement on the International Lunar Network missions.
- For ILN need a low mass, low power robotic system to reach 3m

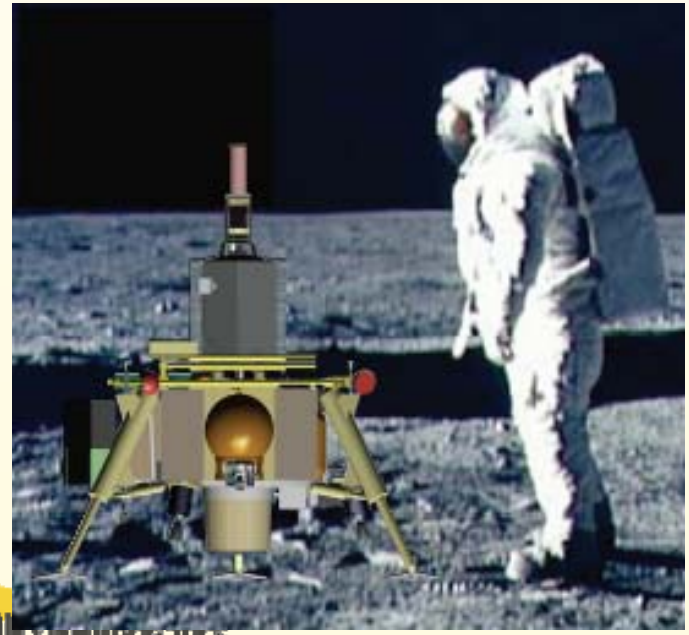

J. Adams pdf

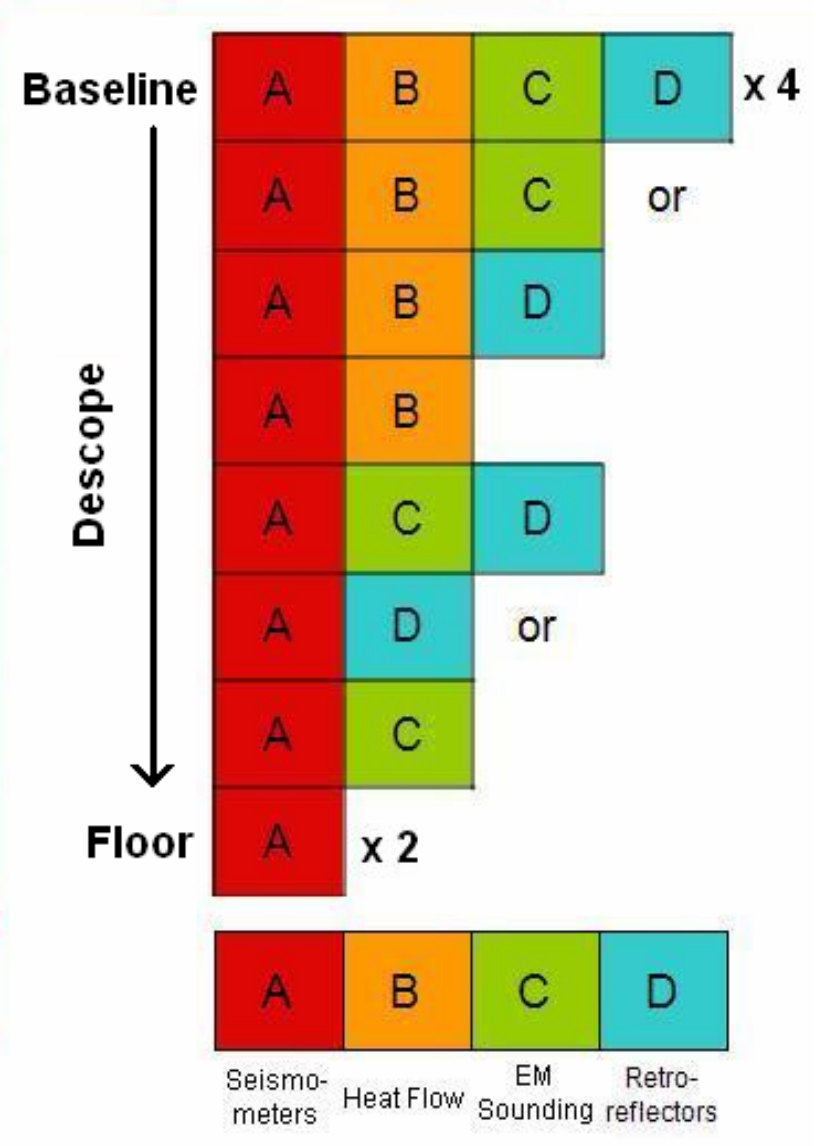

ILN SDT

Background to Heat Flow

- How to do it:
  - Step 1: Make a hole
  - Step 2: Deploy thermal sensors and measure
    - Thermal conductivity and
    - Thermal gradient

$$\textbf{Heat Flow} = -k\,\frac{\Delta T}{x}$$

- Lunar surface is a great insulator. Watch out for:
  - Thermal isolation between sensors
  - Thermal isolation from the lander

- Apollo experience:
  - A15: drill got 'stuck';
  - A16: astronaut tripped over the cables
  - A17: success but it was a tough work!

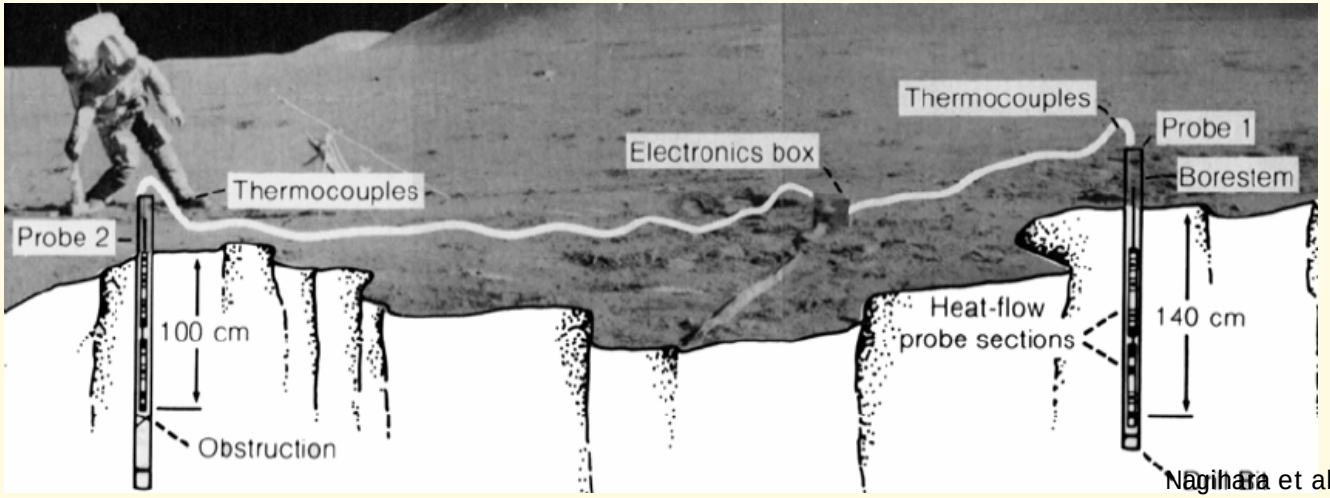

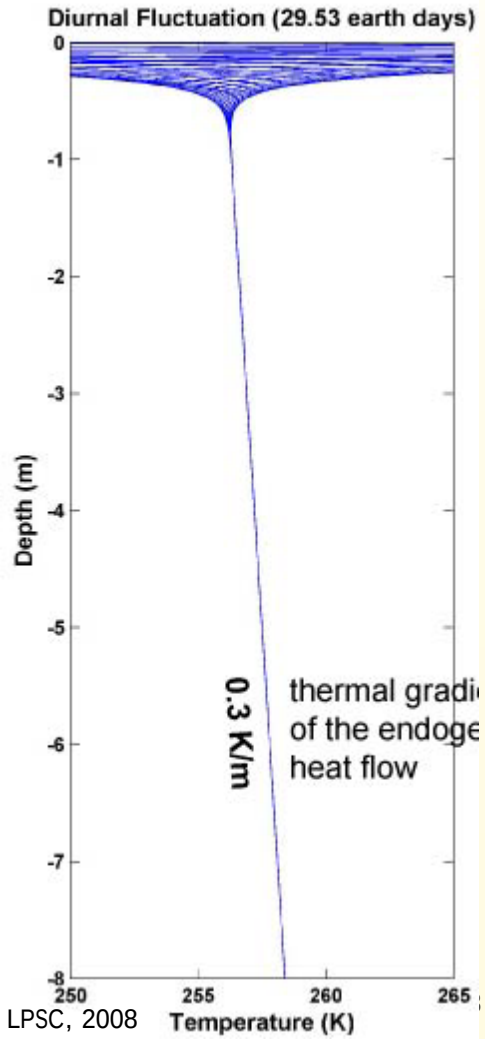

Nagihara et al., LPSC, 2008

Problem: Lunar regolith is dense!

- Regolith becomes very dense very quickly
  - Relative density approaches 100%
- To make a hole:
  - Remove soil OR
  - Crush and compact soil

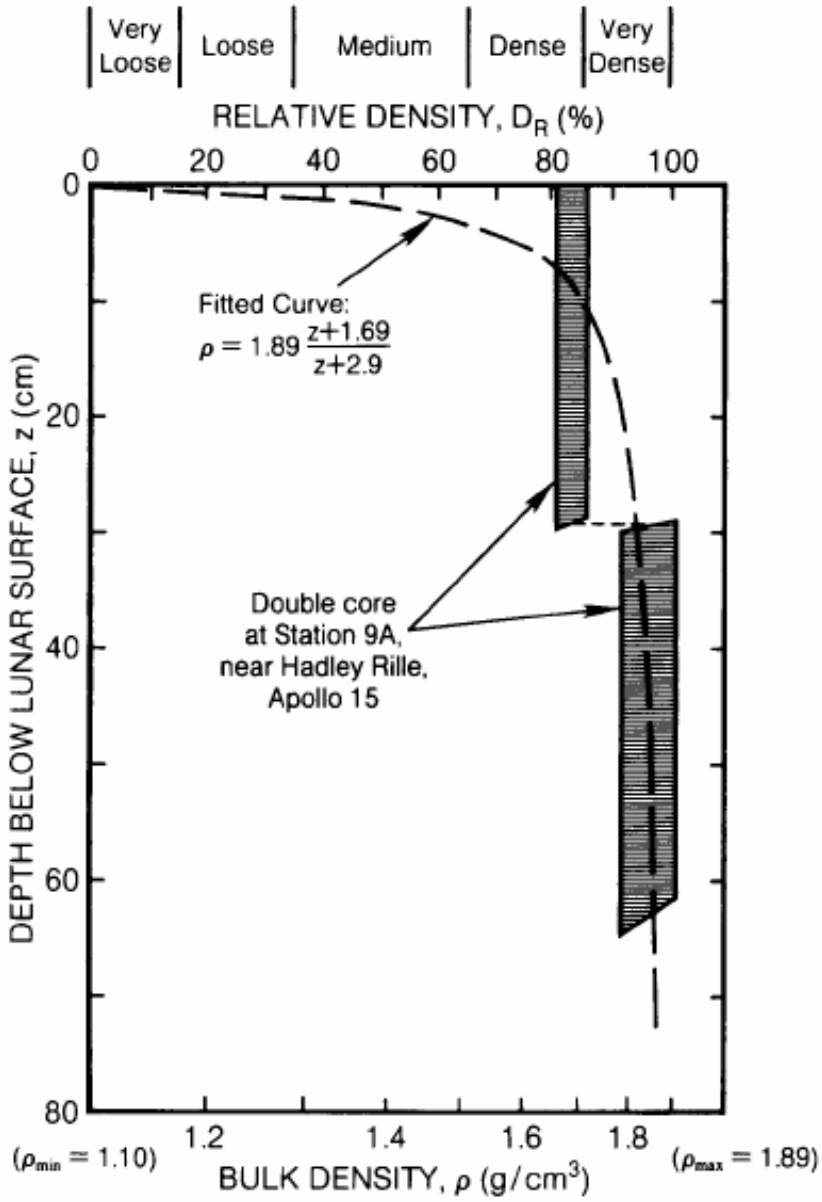

Possible deployment methods

	Method	Problem
1	Drill a hole, insert a heat probe into it.	Difficult to automate
2	Drill a hollow, low conductivity casing, insert a probe into it (Apollo approach)	Difficult to automate
3	Drill a probe into the regolith	No thermal isolation
4	**Pound the rod into the regolith and deploy sensors, pull the rod out**	**Need vacuum rated percussive head**
5	Mole pulls tether into the soil	Wont reach 3m in 100% relative density soil
6	**Blow the soil out using gas to create a hole**	**Need gas**

Not collapsed

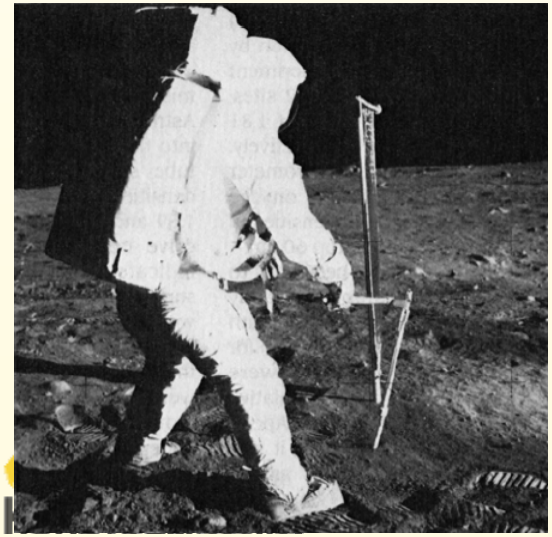

Courtesy NASA

Gelmi et al., 2007

Pneumatic Proboscis System

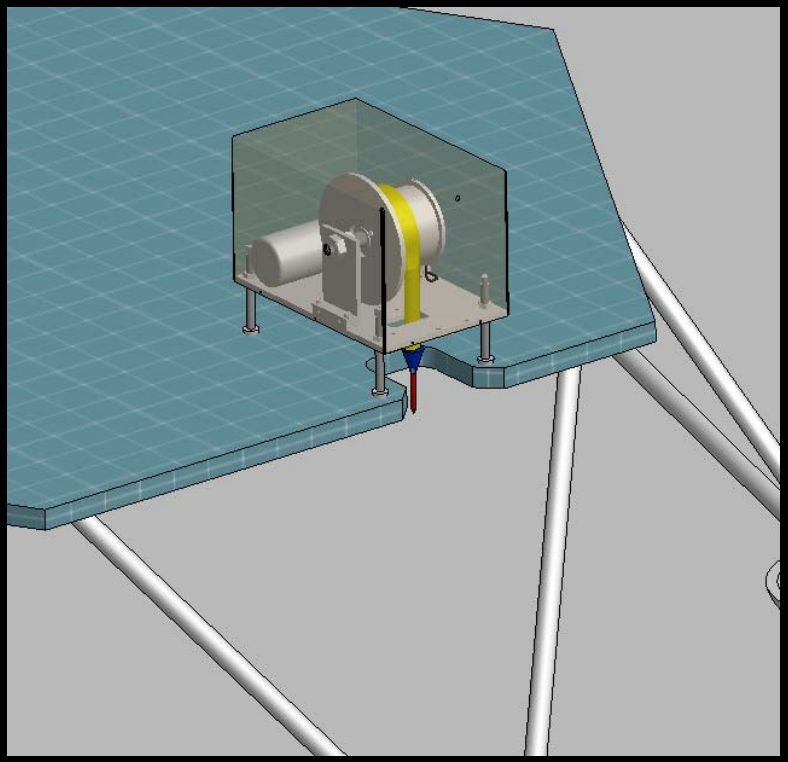

Pneumatic Proboscis System

Components

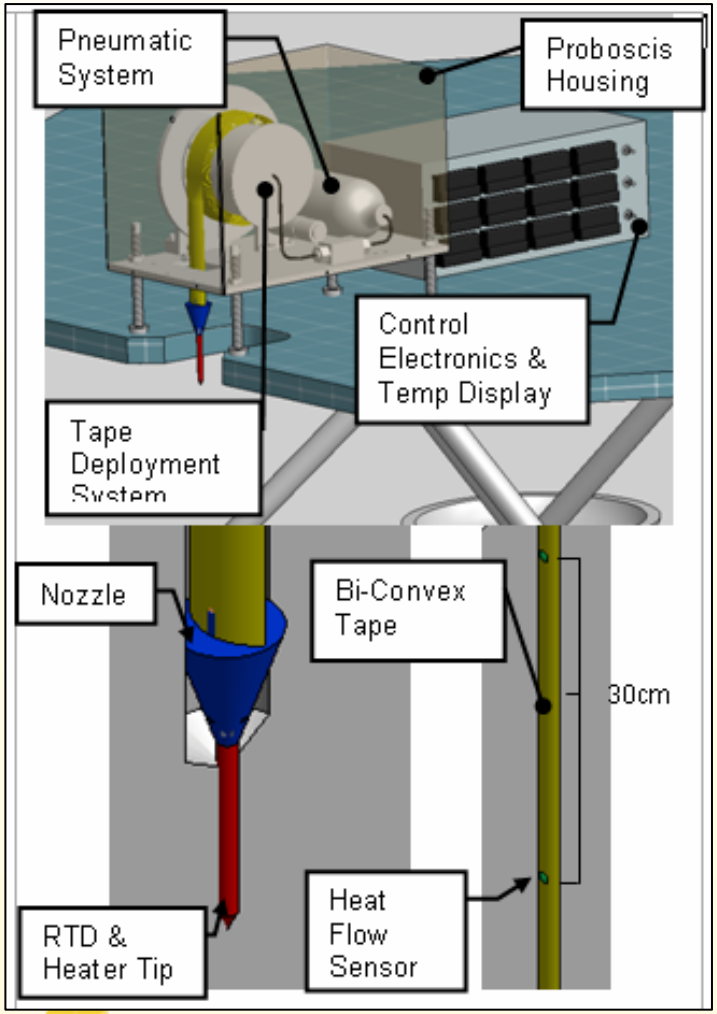

HONEYBEE ROBOTICS

Deployment

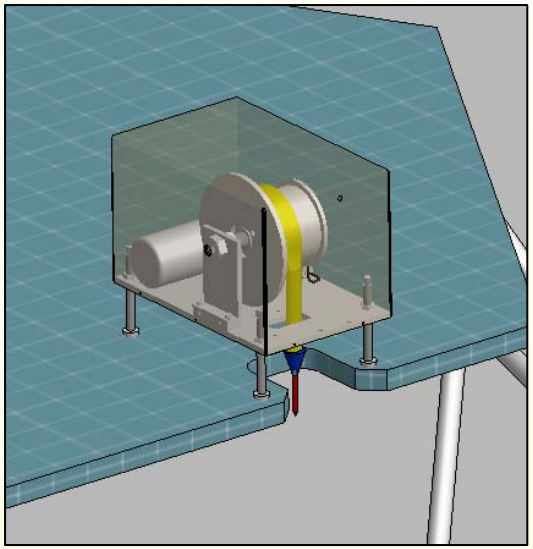

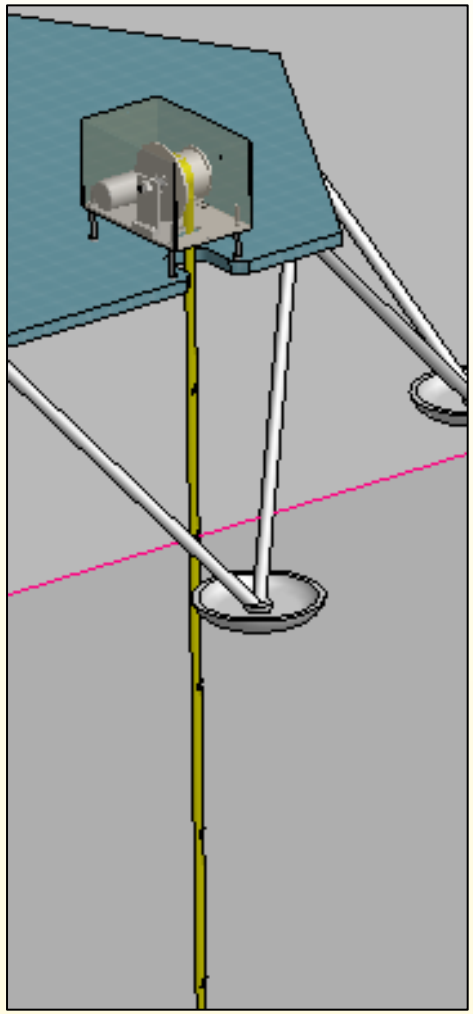

Pneumatic Proboscis System: Proof of Concept

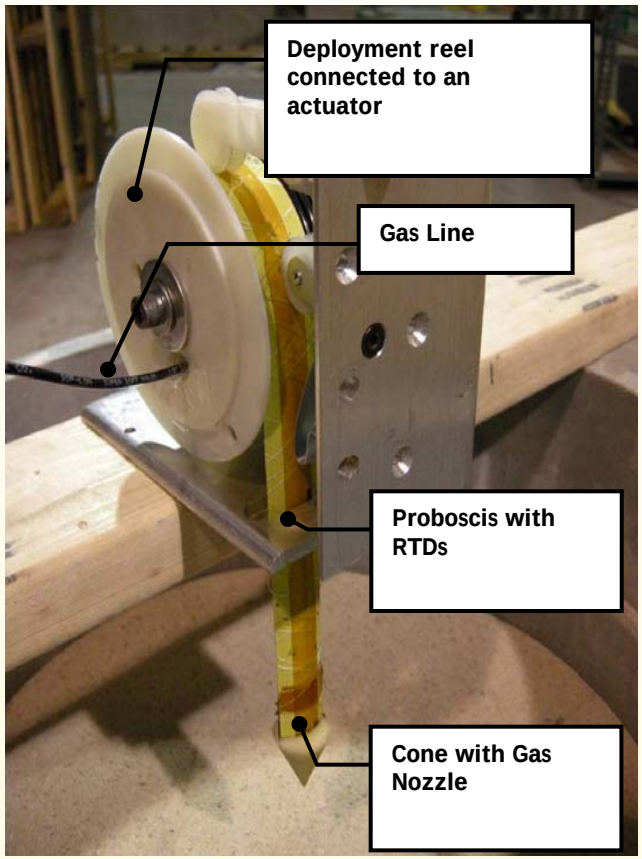

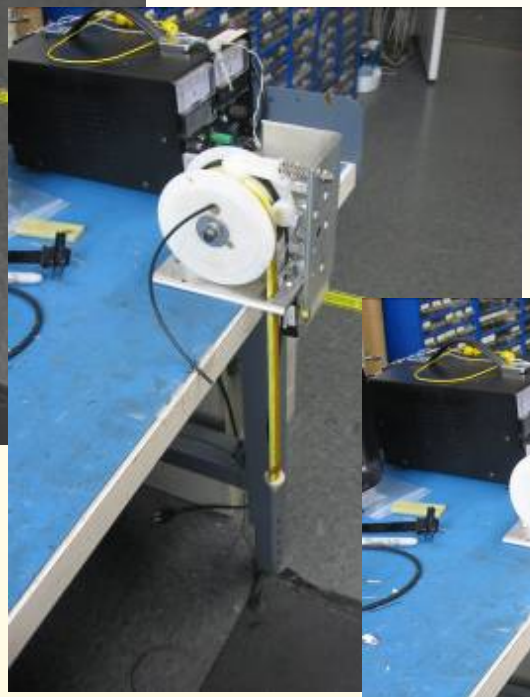

HONEYBEE ROBOTICS

Pneumatic method of making a hole

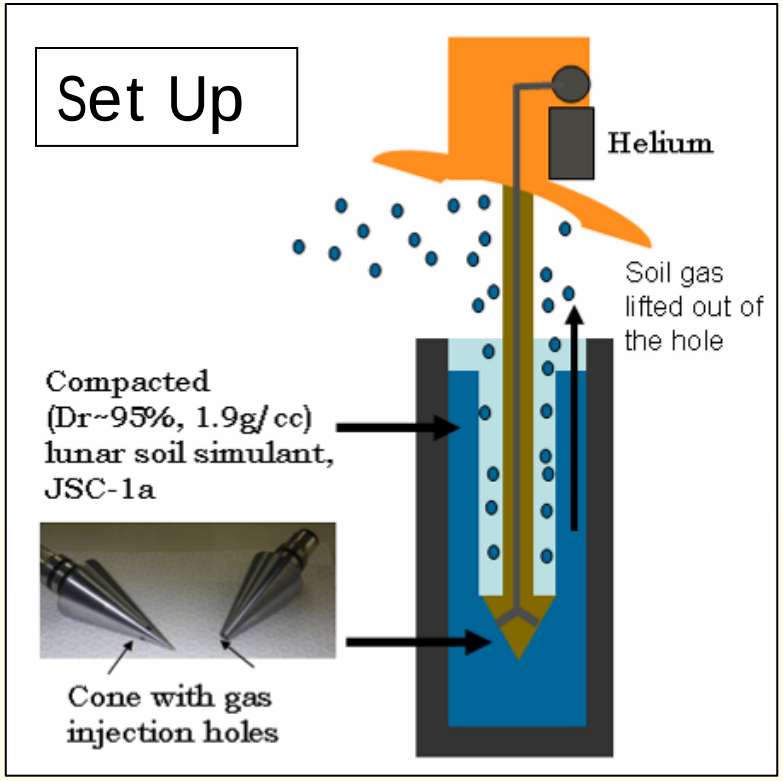

Future Vacuum Tests

Results

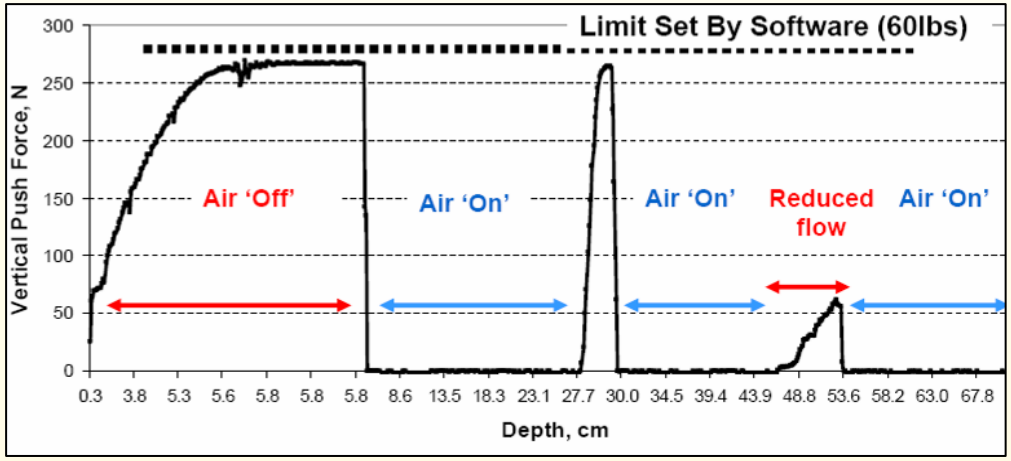

Results

Test#	Cone Geom.	Gas Type	Regulator Pressure [PSI]	Measured Vol. Flow Rate [SCFM]	Gas Density [kg/m^3]	Mass Flow Rate [grams/sec.]	Actual Avg. WOB [lbf.]	Depth Penetrated [in.]
1	no hole	n/a	n/a	n/a	n/a	n/a	100	<2
2	4 holes	air	20	1.5	3	2.12	0	25
3	4 holes	air	5	0.8	1.7	0.65	0	25
4	4 holes	He	5	0.8	0.2	0.09	0	25

Tests at Lunar G and in Vacuum

- **Gas: Nitrogen @ < 9 psia**
- **Initial Soil Mass: 50g or 100 g**
- **Material: JSC1-a**
- **Chamber Pressure: ~ 1-4 torr**
- **Gravity: 1.67 and 9.8 m/s^2**

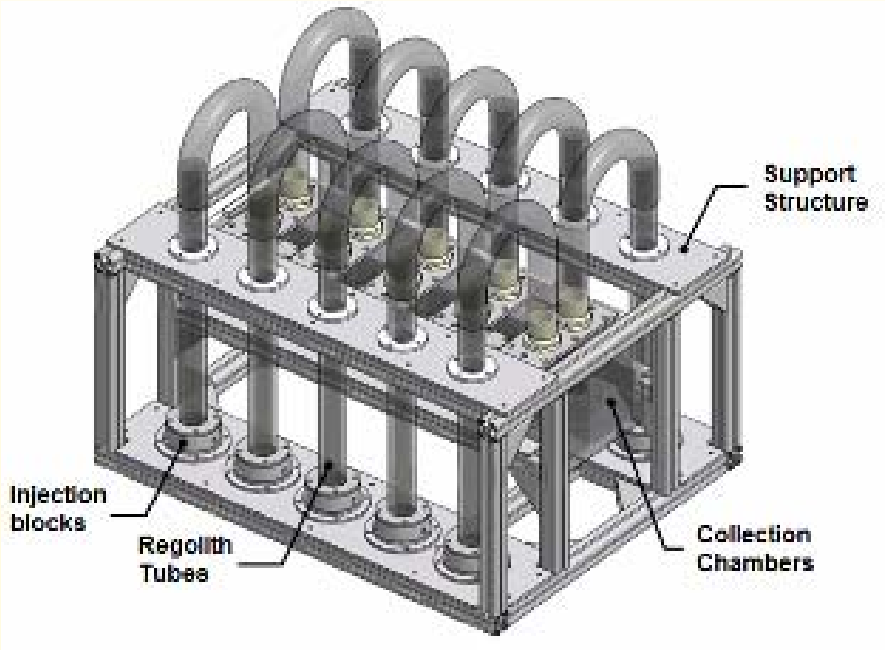

HONEYBEEROBOTICS

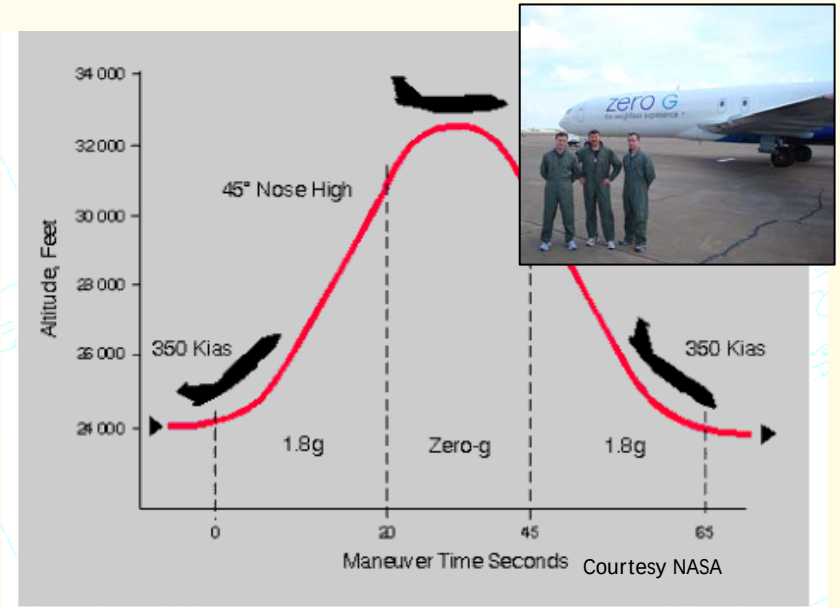

Courtesy NASA

Pneumatic Test Results at 1/6th G and Vacuum

- 1 gram of N_2 at 7 psia can lift over 6000 g of JSC-1a
- In Hard Vacuum efficiency of 1:10 000 possible

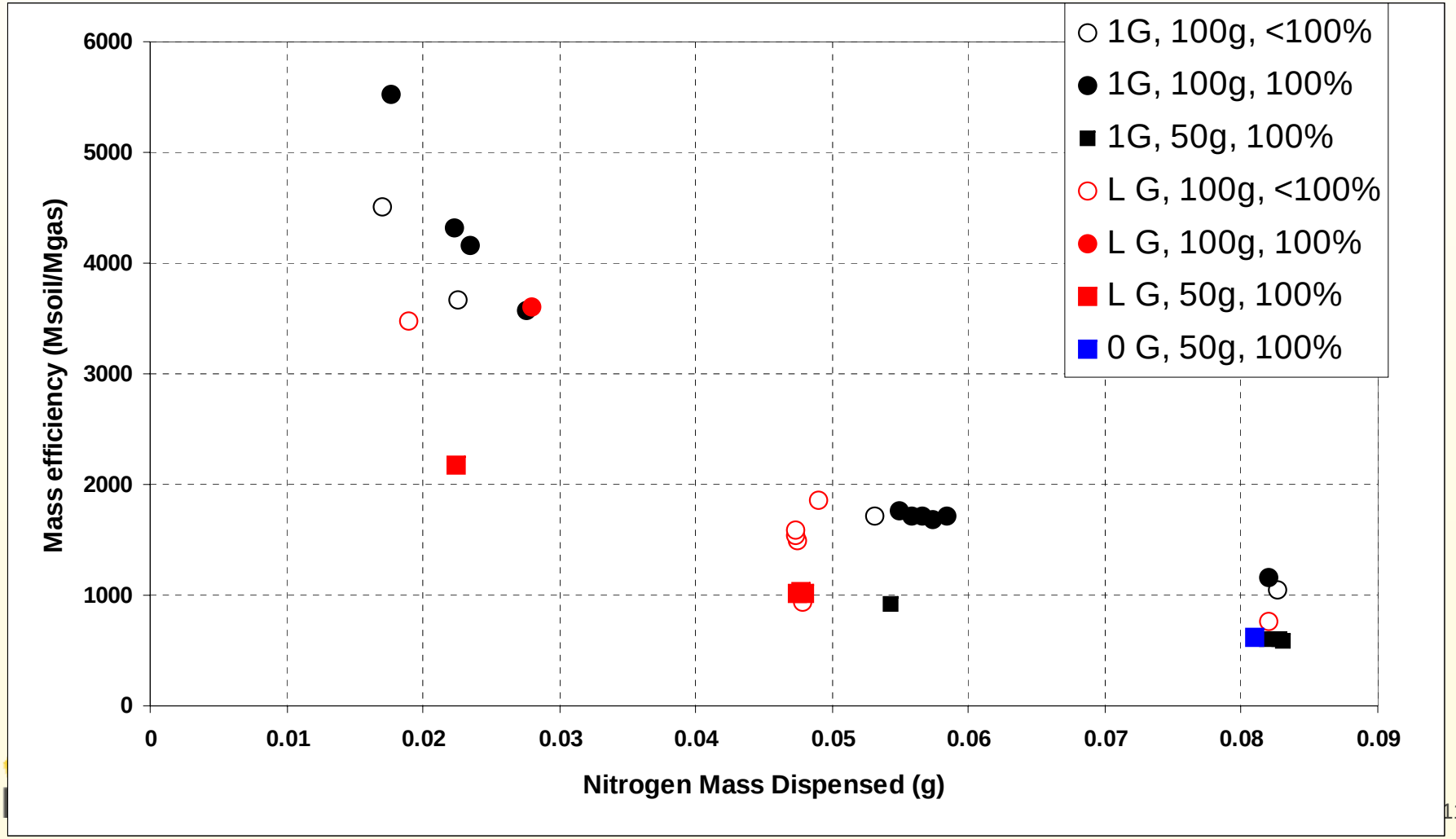

Percussive Heat Flow Probe

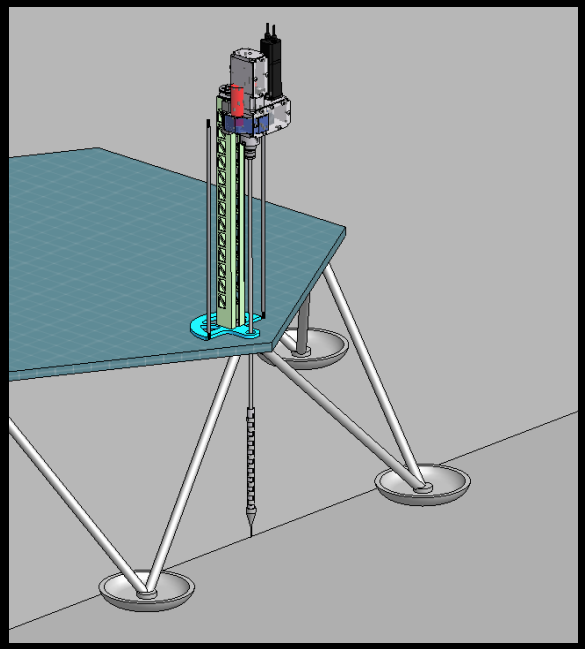

Percussive Heat Flow Probe

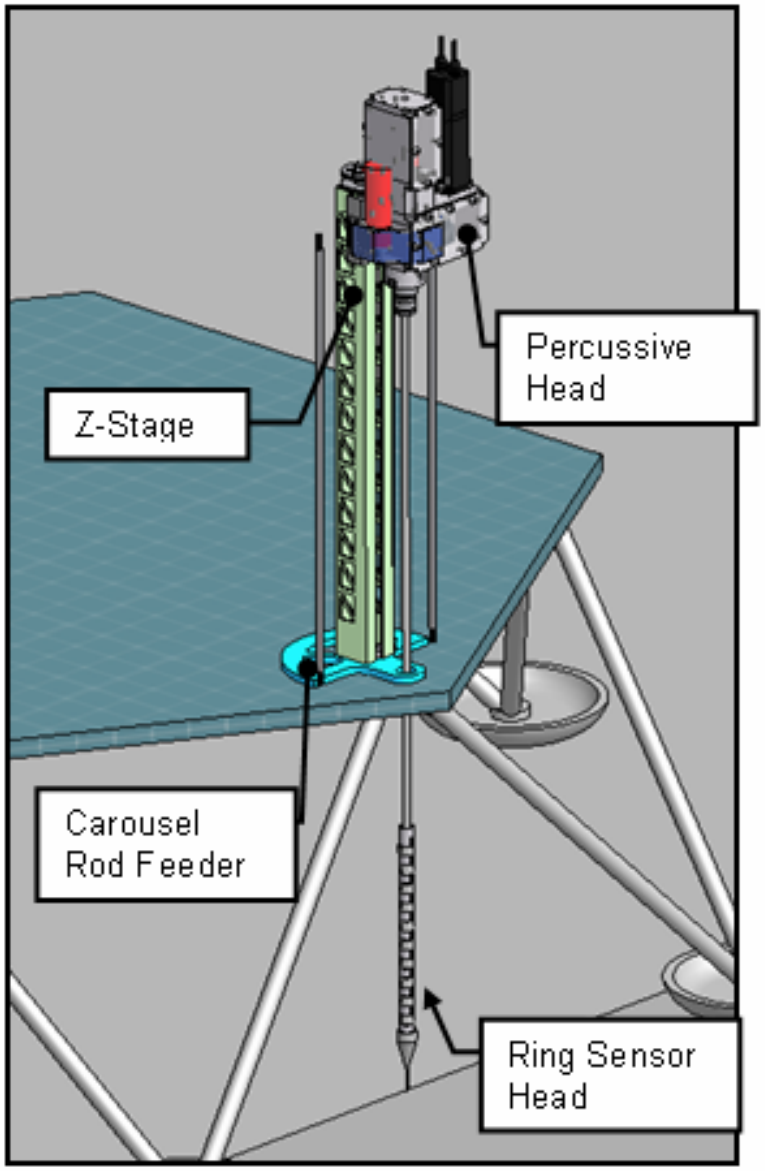

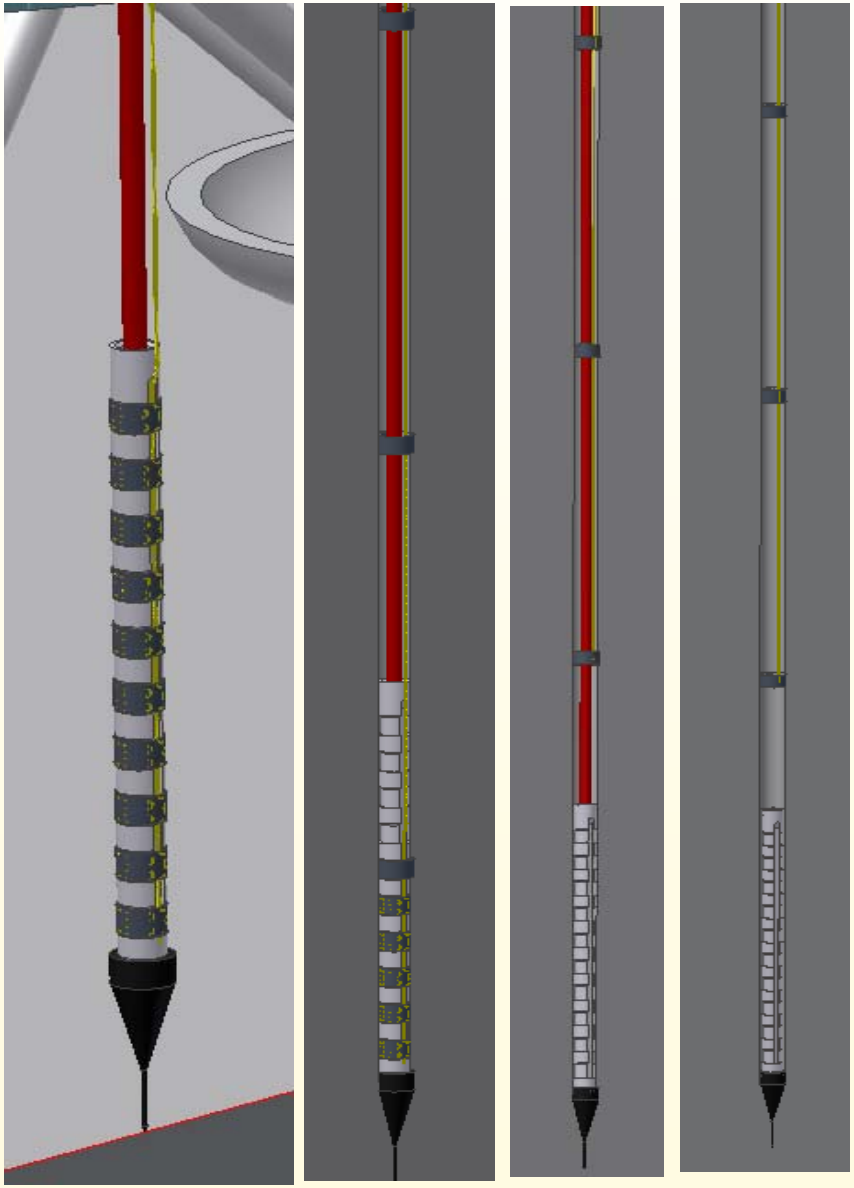

Thermal Sensors Deployment

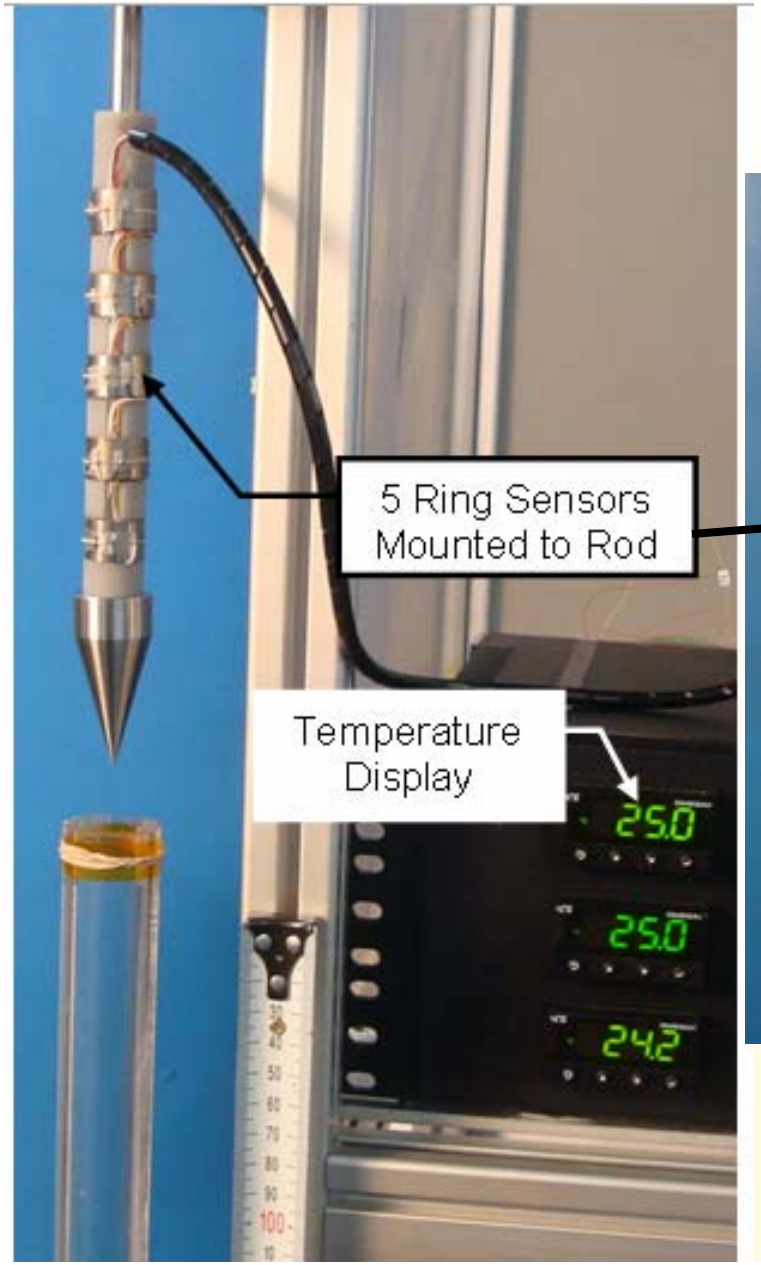

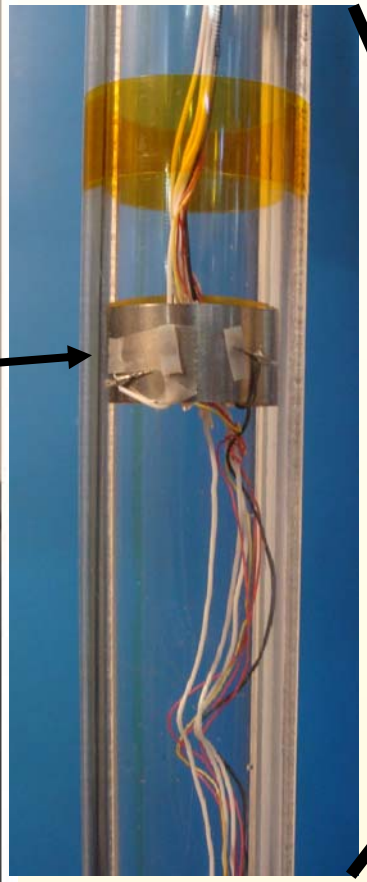

Testing thermal sensors

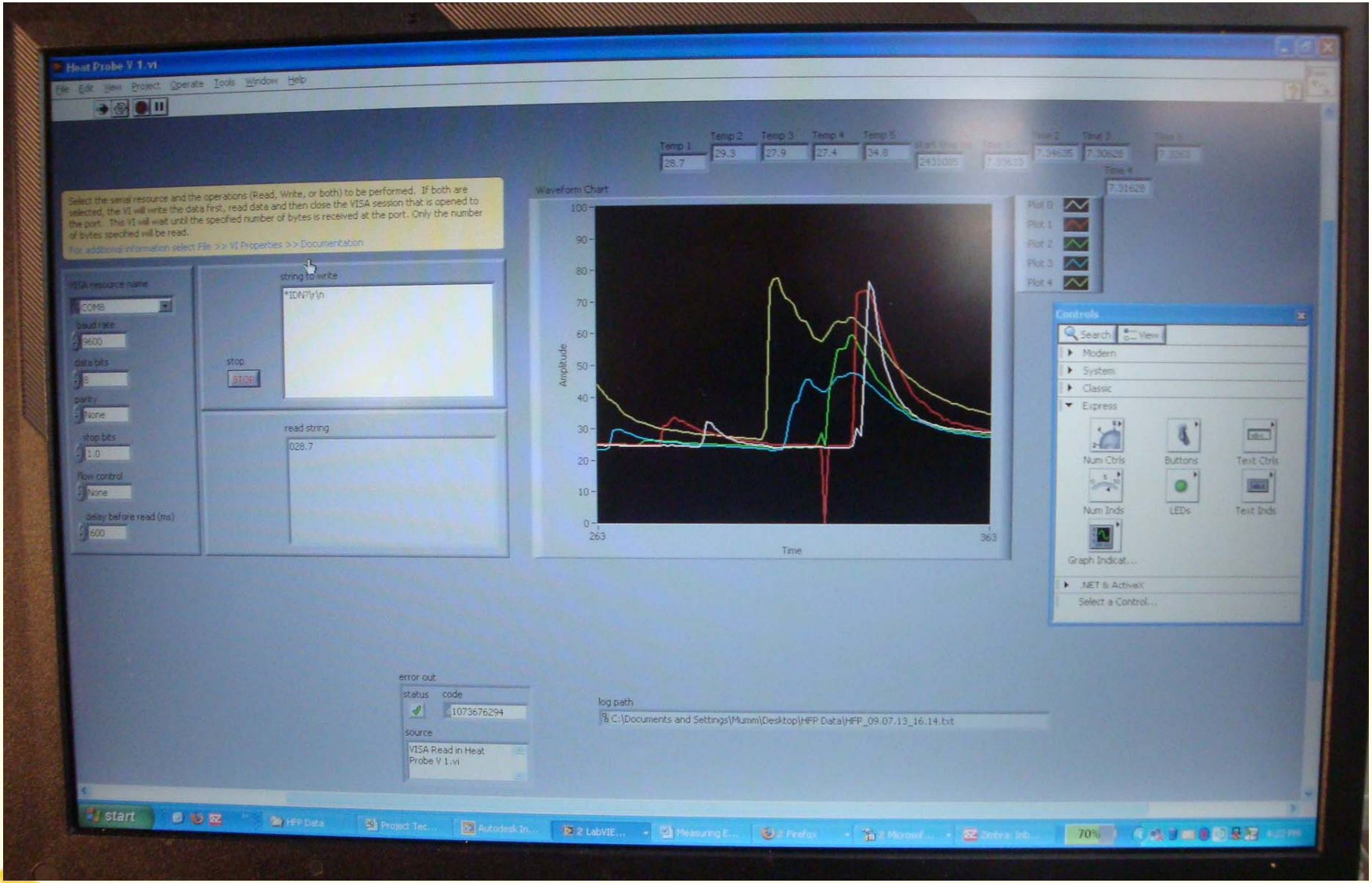

HONEYBEE ROBOTICS

Demonstrating percussive system in soil

- Used JSC-1a at 1.9 g/cc (Dr >90%)
- 1 meter reached in 1-3 minutes

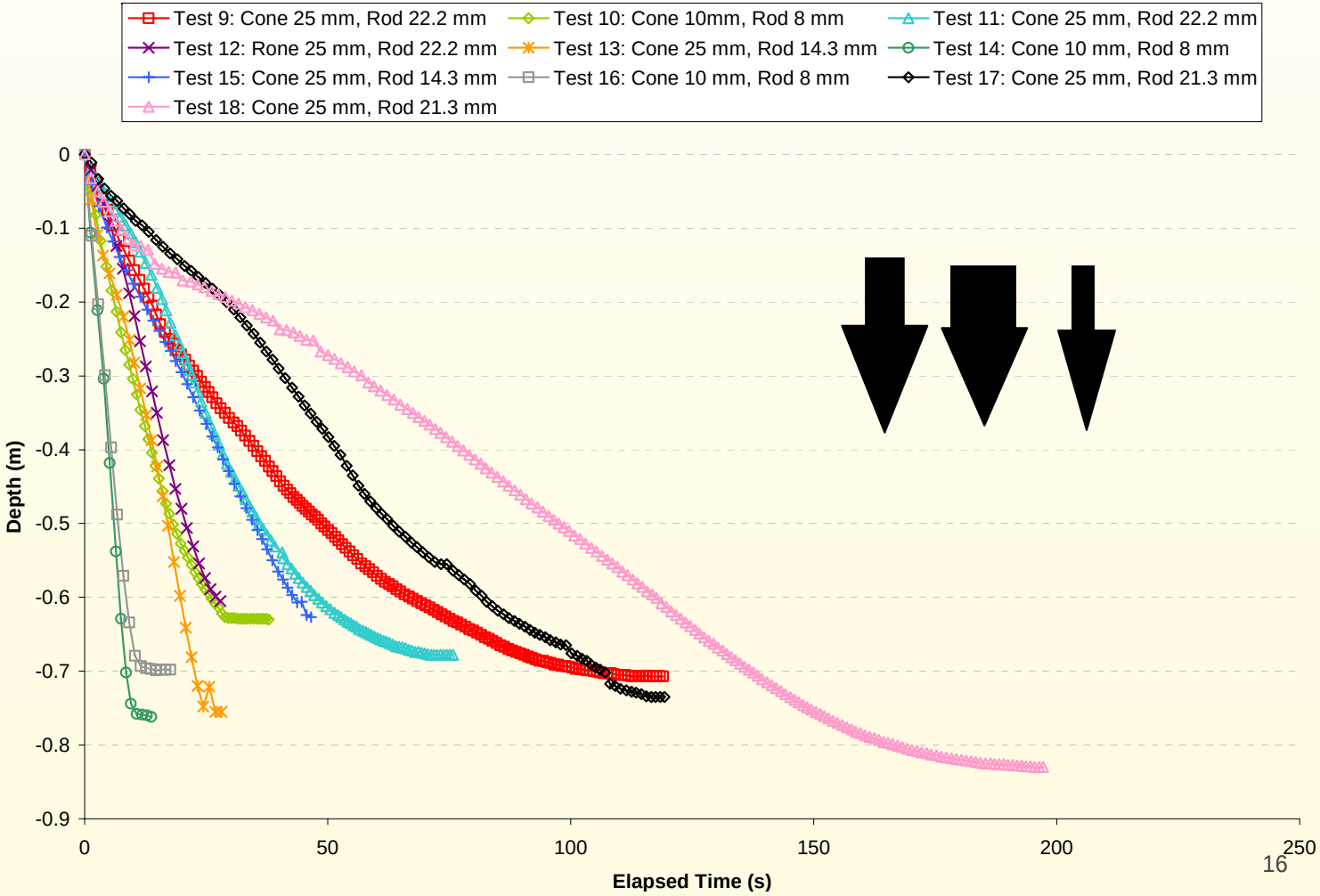

Enabling Technology: Vacuum Percussive Head

- Vacuum rated Percussive head was successfully life tested in vacuum for over 2.5 hrs

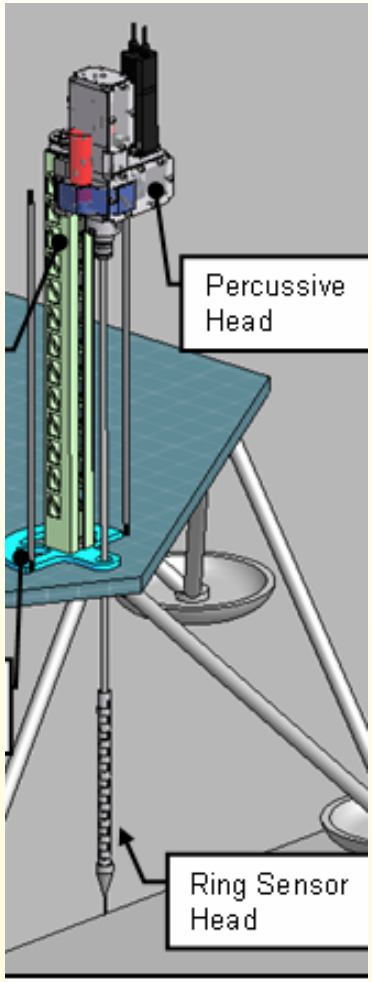

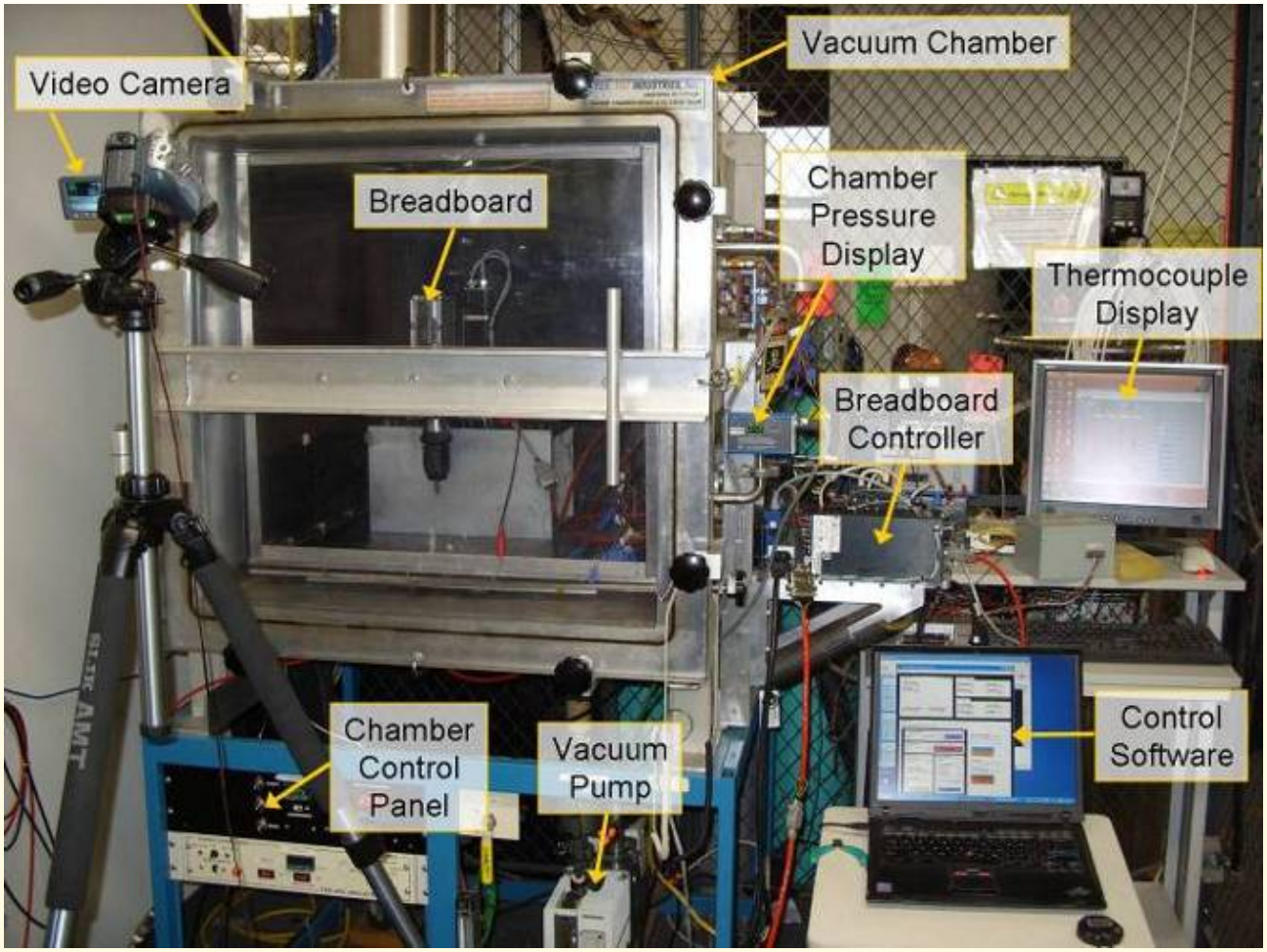

Percussive system as a geotechnical tool!

- Rate of penetration can indicate geotechnical soil properties: bearing strength and density
- This information can be linked to heat flow data to improve models

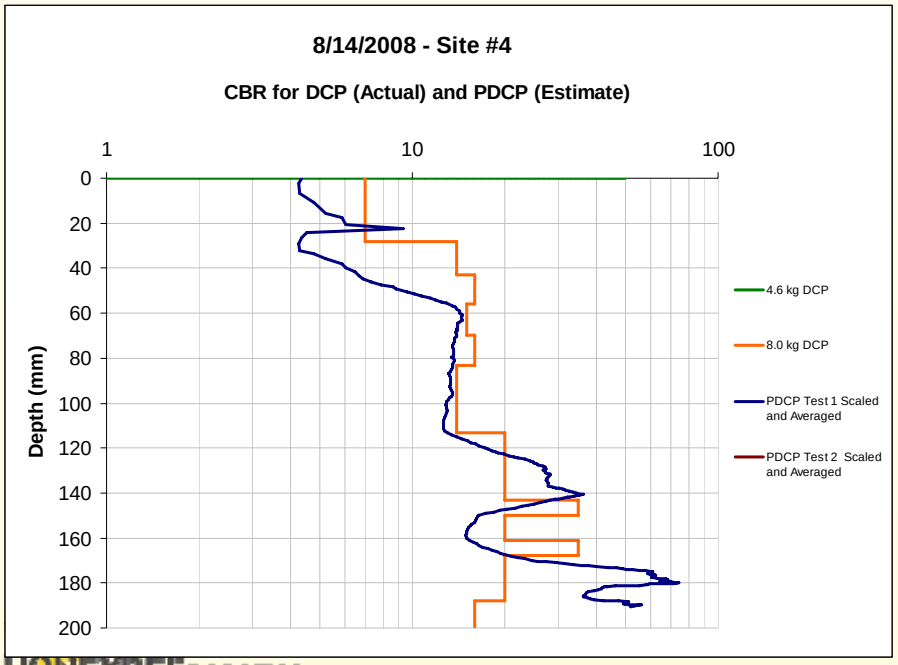

More in the upcoming book

Drilling in Extreme Environments

Penetration and Sampling on Earth and Other Planets

Editors: Yoseph Bar-Cohen and Kris Zacny

Chapter 1: Introduction

Chapter 2: Principles of Drilling and Excavation

Chapter 3: Ground Drilling and Excavation

Chapter 4: Ice Drilling and Coring

Chapter 5: Sea Floor drilling

Chapter 6: Extraterrestrial Drilling and Excavation

Chapter 7: Planetary sample acquisition, handling and processing

Chapter 8: Instruments for In-Situ Sample Analysis

Chapter 9: Contamination and Planetary protection

Chapter 10: Conclusions -